SEAL MATERIALS

EPDM, FKM or NBR? Choosing a valve O-ring

The process fluid in a valve stays at 70 °C. A cleaning cycle reaches 130 °C. The cleaning cycle exceeds the listed upper temperature for two of the three SPCV seal options.

Tubing Supply AS | 23 November 2026

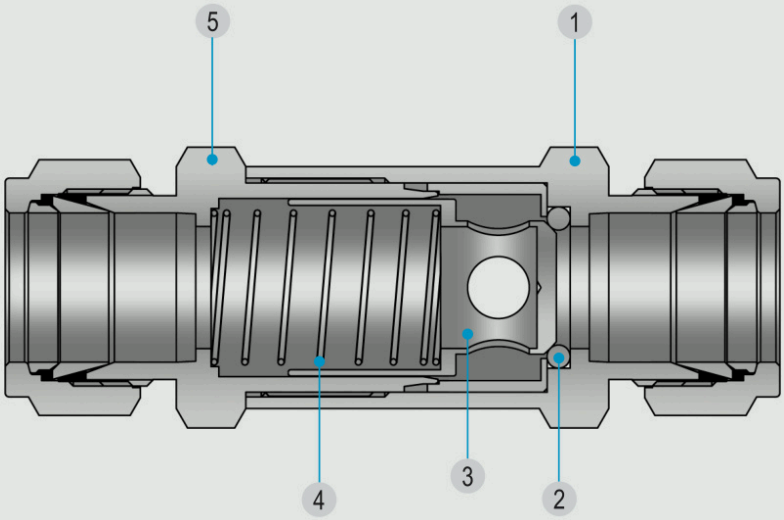

BMT SUPERLOK

SPCV series

Section through the check valve

SPCV section. Item 2 is the O-ring, p. 2.

SPCV EPDM UPPER LIMIT

121 °C

Choose against every fluid and temperature the seal sees, including cleaners and start-up conditions. Then check the compound offered in the actual valve. BMT lists 121 °C as the SPCV upper limit for both EPDM and NBR. The standard fluorocarbon passes this temperature screen. Its chemical compatibility and the complete valve rating still need checking.

MEDIA AND MATERIAL

Screen the polymer, then identify the compound

An O-ring touches the fluid even when most of the valve is stainless steel. A seal can swell, harden or lose sealing force while the body remains sound. Start with the fluid trade name and composition, concentration, temperature and duration. Separate the process fluid from flushes, lubricants and cleaning agents.

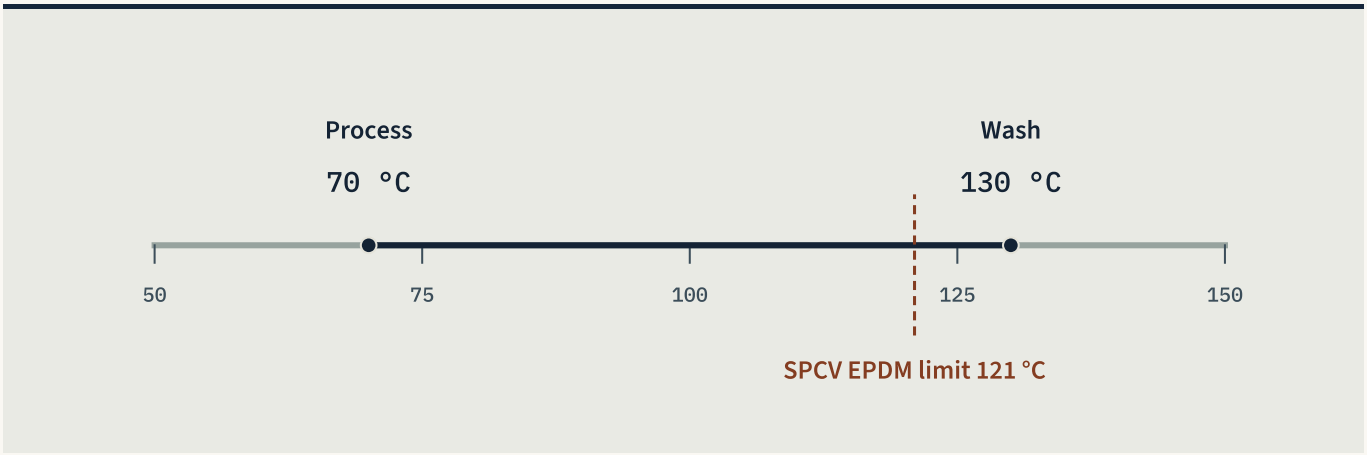

Illustrative duty compared with the SPCV EPDM upper temperature. Chemical compatibility is a separate check. BMT source.

Parker describes these trends by polymer family. Different compounds in one family can behave differently. For a water/glycol coolant, identify the glycol concentration and inhibitors. “Hydraulic fluid” can describe either a mineral-oil fluid or a phosphate ester, which can lead to different seal choices.

Three families to screen

Seal family	A useful starting point	Condition to investigate
EPDM	Water and certain glycol-based fluids	Mineral-oil exposure
FKM	Many mineral oils and fuels	Hot water, steam or polar solvents
NBR (Buna-N)	Many petroleum oils and hydraulic fluids	Heat, ozone and the additive package

Parker O-Ring Handbook, polymer families

WORKED SELECTION

One valve, two operating conditions

In BMT's SPCV series, the standard seal is listed as Viton (fluorocarbon). The ordering table uses E for EPDM and N for NBR. The SPCV material table lists −57 to 121 °C for EPDM, −23 to 121 °C for NBR and −23 to 191 °C for the standard fluorocarbon seal.

What the 130 °C wash establishes

At 130 °C the wash is 9 °C above the published maximum for both SPCV EPDM and NBR. The standard fluorocarbon range includes 130 °C. Its suitability still depends on the cleaner, its concentration and whether the seal sees hot water, steam or another medium.

Why the series name belongs on the record

BMT lists a different ethylene-propylene temperature range for SHCV. Substituting the SHCV figure for SPCV would change the result incorrectly. Record series, seal option, media in sequence and the most demanding pressure–temperature combination.

Does a black O-ring identify the material?

Colour alone cannot establish polymer or compound. Use the valve configuration, seal package identification or manufacturer confirmation. Check a replacement against the actual valve series and duty.

SPCV at the 130 °C cleaning temperature

EPDM · E	NBR · N	FKM · standard
Above range	Above range	Verify cleaner

Technical references

BMT SUPERLOK · SPCV materials and ordering, pp. 2–3
BMT SUPERLOK · SHCV seal options, p. 4
Parker O-Ring Handbook · §§ 2.2.1, 2.2.4, 2.2.7

See the SPCV valve family in the parts catalogue