INSTRUMENTATION VALVES

Does a larger needle valve connection increase flow?

A designer changes an instrument line from 3/8 in. to 1/2 in. The new needle valve fits the tube. Has its capacity changed?

Tubing Supply AS | 23 November 2026

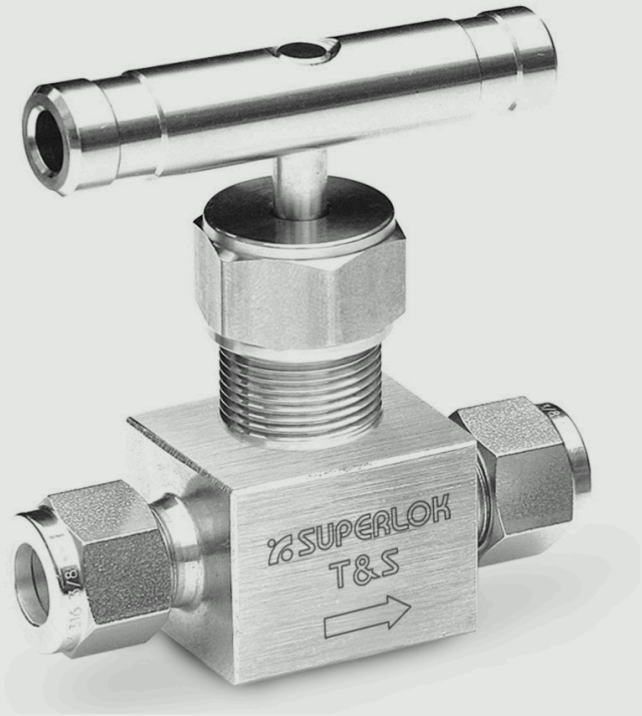

BMT SUPERLOK

SBNV series

Integral-bonnet bar-stock needle valve

Manufacturer's photograph · SBNV series, catalogue cover

LISTED VALVE COEFFICIENT

0.73 Cv

BMT lists the same Cv for both SBNV2 connection sizes. At that coefficient and the same pressure drop, either valve passes the same calculated water flow. A larger tube can still reduce friction loss along the run.

COMPONENT GEOMETRY

What changes at the tube end?

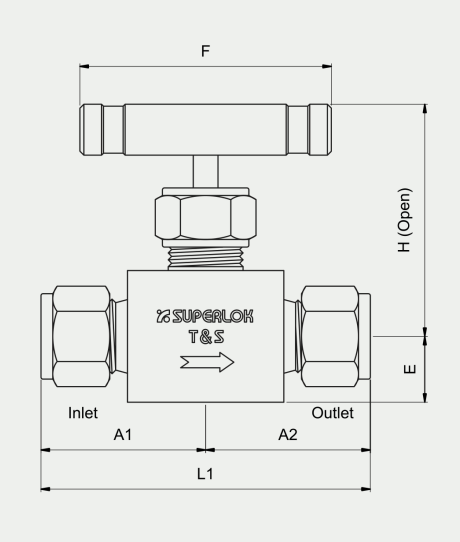

BMT dimensional drawing, p. 3. L1 spans both ends.

DIFFERENCE IN REFERENCE LENGTH

5.6 mm

Changing from SBNV2-S6 to SBNV2-S8 adds 5.6 mm to the catalogue length. On a panel with fixed tube runs, that alters the fit. Both models retain the 6.4 mm orifice and the same listed Cv.

The tube outside diameter (OD) identifies the connection. The orifice describes one internal opening. US Cv accounts for the whole flow path. At the stated opening it gives the flow of 60 °F water in US gallons per minute for a 1 psi drop.

Three straight-pattern BMT SUPERLOK needle valves

Model	Tube OD	Orifice	Cv	Length L1
SBNV1-S4	1/4 in.	4.3 mm	0.37	62.4 mm
SBNV2-S6	3/8 in.	6.4 mm	0.73	78.2 mm
SBNV2-S8	1/2 in.	6.4 mm	0.73	83.8 mm

BMT gives reference dimensions with the nuts finger-tight. Moving from SBNV1 to SBNV2 changes the orifice and the stated Cv. Catalogue, p. 3.

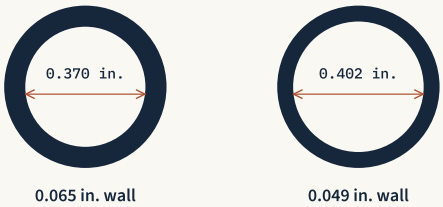

Calculated bore diameters shown at the same scale.

One OD, two bores

Subtract twice the wall thickness from the OD. For a 1/2 in. tube, changing the wall from 0.065 to 0.049 in. increases the bore from 0.370 to 0.402 in. That gives about 18% more flow area. At a given flow the fluid moves more slowly, which can reduce friction loss.

COOLING-WATER EXAMPLE

Where the 0.65 bar goes



Closed cooling-water system, Gebze power plant, Türkiye. Harald the Bard · CC BY-SA 4.0 · cropped. The calculation below is illustrative.

A level cooling-water branch needs **5.0 L/min**. The supply is at 3.00 bar gauge and the return at 2.35 bar gauge. With negligible change in velocity head between those points, the difference of **0.65 bar** is available across the whole branch.

At the target flow, tubing, bends and the filter use 0.35 bar in layout A and 0.50 bar in layout B. The remainder is the differential available between the two valve ports.

Pressure available at the valve

Target flow 5.0 L/min

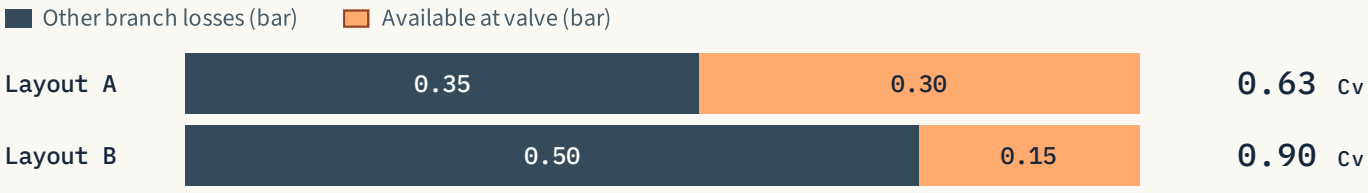

Both bars total 0.65 bar. The value at the right is the US Cv required to pass the target flow.

Reproduce the calculation

For clean water near room temperature, required Kv ≈ Q / √Δp, with Q in m^3/h and valve Δp in bar. Here 5.0 L/min = 0.300 m^3/h. Multiply Kv by 1.156 for US Cv. Layout A gives 1.156 × 0.300 / √0.30 ≈ 0.63.

VALVE SELECTION

How much differential is enough?

At 5.0 L/min, a valve operating at Cv 0.73 needs about **0.23 bar** across its ports. At this flow, layout A leaves about 0.07 bar above the calculated valve requirement. Layout B is short by about 0.08 bar. These margins refer to capacity at the listed Cv. Control at the chosen stem opening is a separate check. If the differential is held at 0.15 bar, either SBNV2 connection passes about **4.1 L/min** in this calculation.

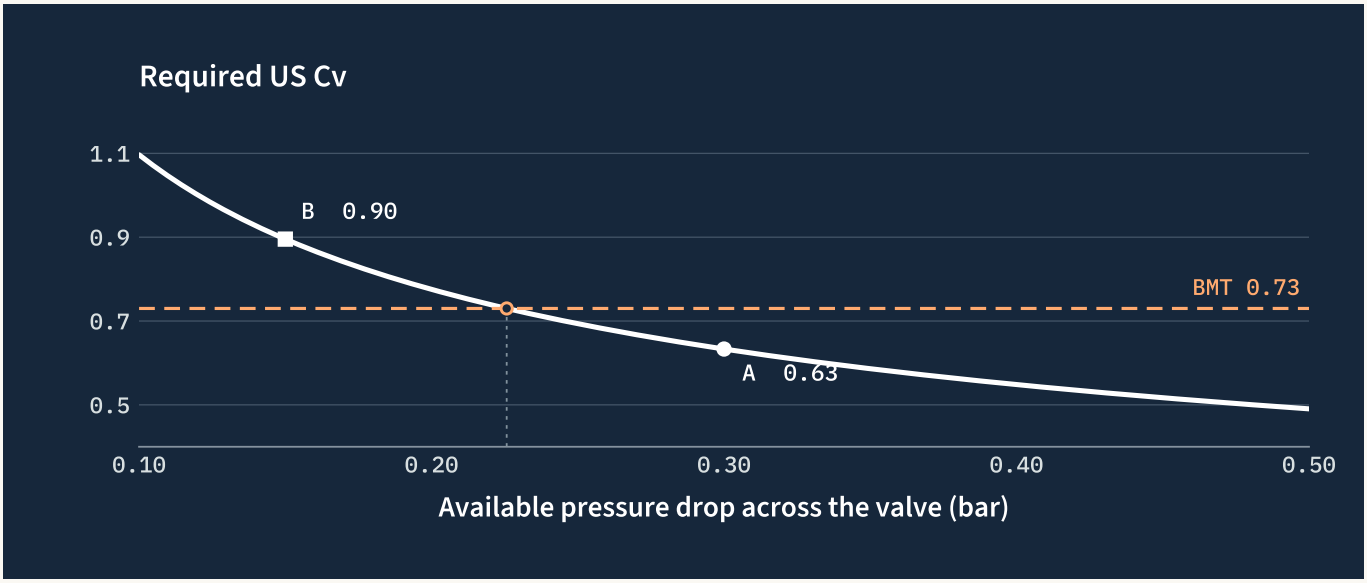

Tubing Supply calculation for steady, turbulent, single-phase water flow at relative density near 1, without cavitation, flashing or choking. The dashed line is BMT's listed Cv. To predict actual branch flow, solve line and valve losses together.

Check the opening you will use

A valve that passes the design flow can still leave little room for adjustment. Repeat the balance at the filter's end-of-service pressure drop if flow must be maintained as it loads. Check minimum, normal and maximum flow against BMT's curve for Cv versus turns open for the relevant orifice and stem tip. Verify body, stem and packing for the medium, pressure and temperature. BMT, p. 4.

For gas, use a compressible-flow method with gas properties, temperature, absolute inlet and outlet pressures and the reference conditions for any stated standard flow. IEC 60534-2-1.

Technical references

BMT SUPERLOK · SBNV catalogue 24 October 2024, pp. 1–5
Spirax Sarco · Water valve sizing and Cv and Kv conventions
U.S. Department of Energy · Fluid flow Volume 3, module 3
ISA · Control Valve Primer Chapter 5, definition of US Cv

Discuss a valve selection with Tubing Supply