VALVE SEALING

Valve sealing design

Seat, stem packing, body gasket or O-ring? Locate the leakage path first, then select the seal geometry, material and evidence for that job.

Tubing Supply AS | 23 November 2026

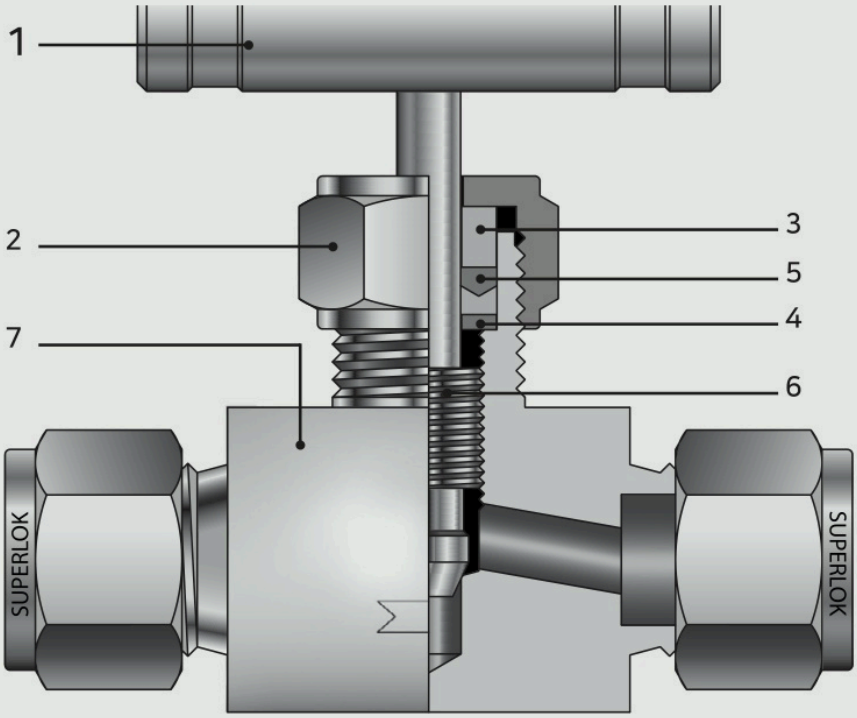

BMT SUPERLOK

SBNV section

BMT's SBNV sectional drawing shows the moving stem passing through its packing before the tip reaches the seat. BMT · Integral Bonnet Bar Stock Needle Valves, R7 · p. 2

DRAWING CHECK

3 paths

Start with the destination of a leak. Fluid can pass through the closed seat, out along the moving stem or out through a static joint. Each points to a different design decision.

IN THIS GUIDE

02 Leakage paths
03 Geometry & materials
04 Evidence & diagnosis

LEAKAGE PATHS

Which surface needs to seal?

A valve that isolates perfectly can still leak to atmosphere. A pressure-tight valve body can enclose a worn seat. Identify where fluid is allowed to travel and where the boundary has to hold in each operating mode.

Three interfaces on a valve drawing

Interface	Demand on the seal	Useful specification
Seat or tip against its mating surface	Holds a differential when closed. Load direction, surface damage and particles can affect closure.	Name the shut-off direction, medium, differential, temperature and permitted leakage rate.
Stem through its packing or stem seal	Maintains an external boundary while the stem rotates or travels. Friction, stem finish and thermal cycling matter.	Specify movement, cycle count or duty, external leakage criterion and allowable operating force or torque.
Static body or bonnet joint	Retains compression between stationary parts as pressure and temperature change. The joint and sealing faces control the load.	Identify the joint design and approved gasket or O-ring, service temperature and external tightness requirement.

A useful BMT distinction

In the SBNV series, BMT lists PTFE as standard packing and PEEK as a packing option. The optional soft-seat stem has a PCTFE tip. Ordering a soft seat therefore changes a different interface from specifying PEEK packing.

An O-ring describes a shape. Depending on the design it can seal a fixed joint, move with a piston or form part of a poppet seat. Use the sectional drawing and the item number to say which one you mean.

SOURCES BMT · Integral Bonnet Bar Stock Needle Valves, R7 · p. 2 / Parker · O-Ring Handbook ORD 5700 / ISO 5208 · Pressure testing of metallic valves

GEOMETRY & MATERIALS

Why the compound name is only a start

Two nominally identical polymer families can differ in formulation, hardness, chemical response and recovery. The groove, clearance, pressure direction and temperature decide what the chosen compound must actually withstand.

What changes the material decision?

Condition	What to check
Gas at pressure, followed by a rapid pressure reduction	Gas absorbed into some elastomers can expand and damage them internally during decompression. Check the actual compound, gas composition, pressure cycle and any required rapid-gas-decompression qualification.
A moving seal or cycling stem	Balance sealing contact against friction, wear and heat. Check the finish and motion of the mating part, operating frequency, packing arrangement and available actuator margin.
A static joint heated and cooled repeatedly	Check whether the elastomer can recover contact as the joint moves. For a gasketed joint, verify gasket construction and retained sealing load within the manufacturer's design.
Fluid chemistry changes during cleaning or downtime	List all media, concentrations and temperatures. A compound chosen for dry gas may also see compressor oil, condensate or a cleaning fluid. Screen each exposure and then verify the actual compound.

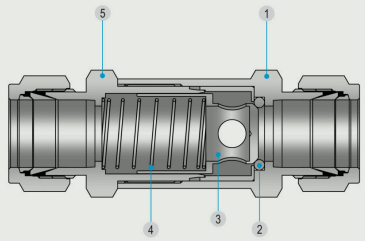

BMT SPCV check valve, catalogue p. 2.

Where geometry changes the question

The SPCV parts list identifies a wetted O-ring, poppet and spring. In this valve check the soft seal together with opening and resealing behaviour. A change of elastomer alone leaves the spring setting and poppet guidance untouched.

SOURCES Parker · O-Ring Handbook ORD 5700 / BMT · Check Valves, SPCV series · p. 2

EVIDENCE & DIAGNOSIS

Specify a leak test that answers the question

Consider a methanol isolation valve that must close tightly and limit releases around the stem during repeated operation. These are two acceptance criteria. A chart can screen the compound for methanol. The order must also specify a permitted rate through the closed seat and a separate external leakage criterion at the stem.

An illustrative valve data sheet

Internal shut-off	Agreed seat-leakage criterion, test fluid, differential and direction, temperature and the exact valve configuration covered.
External stem and body leakage	Required external tightness or applicable fugitive-emission class, test medium, temperature and cycles. Record whether type qualification and production acceptance are required.
Packing and static joints	Compound or exact packing construction, item number, permitted replacements and service limits. Check compatibility in the operating and cleaning media.
Evidence to retain	Approved sectional drawing, materials list, relevant qualification reports, production records as specified and the replacement-kit revision.

Which standard addresses which result?

ISO 5208 covers pressure testing of metallic valves, including closure tightness within its scope. ISO 15848-1 addresses type qualification for external fugitive emissions. Part 2 covers production acceptance testing. State which leakage path, temperature, test medium and acceptance class the report must cover.

What a maintenance report should say

“Process fluid is passing the closed isolation seat” and “external leakage appears where the stem exits the gland” lead to different investigations. Record the location, fluid, pressure, temperature and valve position before selecting replacement parts.

A repair kit is design-specific

Match the BMT series, valve variant, size and revision to the manufacturer’s parts list. Two seals with the same nominal diameter can have different cross sections, compounds and functions. Retain the approved part identity with the valve tag.

SOURCES ISO 15848-1 · Fugitive-emission type testing / ISO 15848-2 · Production acceptance testing / ISO 5208 · Pressure testing of metallic valves / NIOSH · Methyl alcohol

Tubing Supply catalogue · SBNV needle valve